The information herein is the property of PLESSEY PERIPHERAL SYS. Transmittal, receipt or possession of the information does not convey, license or imply any rights to use, sell or manufacture from this information, and no reproduction or publication of it in whole or in part, shall be made without written authorization from PLESSEY PERIPHERAL SYS.

REVISIONS

LTR	DESCRIPTION	DATE	APPROVED
A	REL. to PROD. per E.O. 55711	2-16-79	

PRODUCTION RELEASE

TABLE OF CONTENTS

Drawing Number	Title	Rev.	No. Sheets
MD 701210	Maintenance Drawing Package Cover Sheet	A	1
701210	Expansion Chassis, PM-1150/2	A	1
PL 701210-100	Parts List, Expansion Chassis, PM-1150/2	A	1
701209	Chassis Assembly, PM-1150/2	C	1
PL 701209-100	Parts List, Chassis Assembly, PM-1150/2	B	2
701208	Chassis Sub-Assembly, PM-1150/2	-	1
PL 701208-100	Parts List, Chassis Sub-Assembly, PM-1150/2	-	1
700926	Power Supply Mechanical Outline, PM-1150/2	A	1
MPT01104	Power Supply Assembly, (100054)	A	1
MPT01104-101	Parts List, Power Supply Assembly (100054)	A	1
MPT01102	Schematic Diagram, Power Supply (100054)	A	3

Maintenance Drawing Package

Products Covered by this Drawing Package
PM-1150/2 115 VAC
PM-1150/2 230 VAC

DO NOT SCALE DRAWING
SCREW THREADS PER HANDBOOK H-28
COUNTERBORE AND SPOTFACE FILLET RADII TO BE .015 MAXIMUM
REMOVE ALL BURRS AND BREAK SHARP EDGES EQUIVALENT TO .010R
ROUGHNESS OF MACHINED SURFACES 125√ PER USAS B46.1
STANDARD HOLE TOLERANCE PER ANSI B39.1
TOLERANCES ON .XX = ±.03 .XXX = ±.010 ANGLES = ±0°30'
INTERPRET DIMENSIONS AND TOLERANCES PER USAS Y14.5
DIMENSIONS ARE IN INCHES AND APPLY AFTER HEAT TREAT AND FINISH
UNLESS OTHERWISE SPECIFIED

CONTRACT NO.

DRAWN N. Glass
CHECK N. Glass
DESIGN
PROJ. ENGR. M. Parker 2-20-79
OTHER APPROVALS

Plessey Peripheral Systems

DRAWING TITLE: MAINTENANCE DRAWING PACKAGE

PM-1150/2 Memory Expansion Chassis

SIZE	CODE IDENT NO.	DWG NO.
B	52648	MD 701210

SCALE: | REV. A | SHEET 1 OF 1 (14)

Plessey Peripheral Systems

The information hereon is the property of PLESSEY MEMORIES INCORPORATED. Transmittal, receipt or possession of the information does not comply, license, or imply any rights to use, sell, or manufacture from this information and no reproduction or publication of it, in whole or in part, shall be made without written authorization from PLESSEY MEMORIES INC.

REVISIONS				
ZONE	LTR	DESCRIPTION	DATE	APPROVED
	–	REL TO PROD PER ERO 501076	1-28-77	B.C.
	A	INCORP EO 2150	5-11-78	

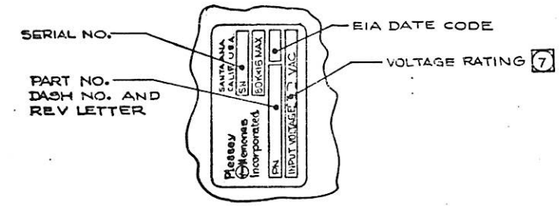

VIEW A
SCALE: NONE

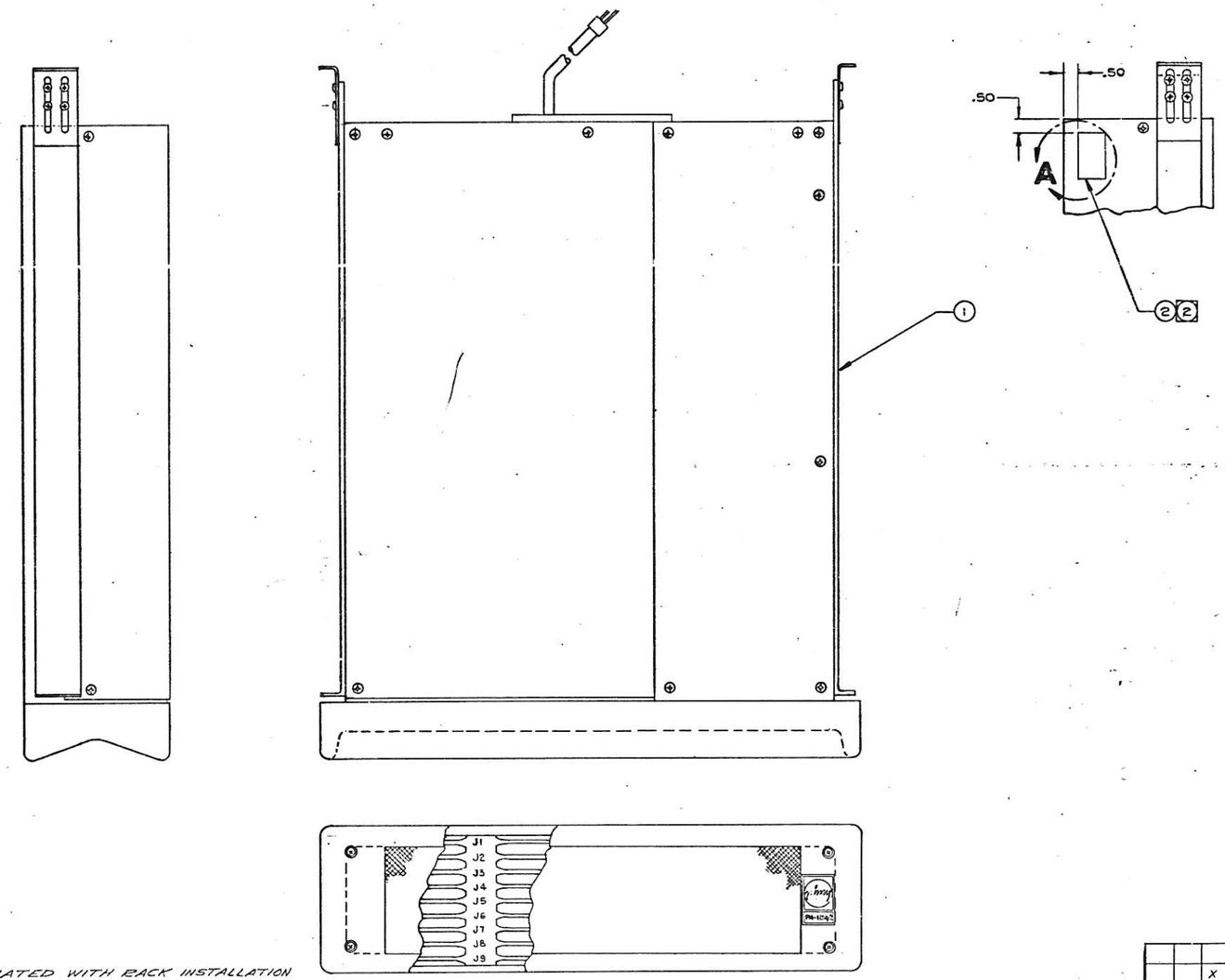

7 CHASSIS CONFIGURATION		
VERSION	VOLTAGE	AIR FLOW
-100	115 VAC	REAR INTAKE, REAR EXHAUST
-101	115 VAC	FRONT INTAKE, REAR EXHAUST
-102	230 VAC	REAR INTAKE, REAR EXHAUST
-103	230 VAC	FRONT INTAKE, REAR EXHAUST

8 ITEM NOTED IS ASSOCIATED WITH RACK INSTALLATION AND SHOULD BE SHIPPED WITH UNIT

7 CHASSIS CONFIGURATIONS ARE DETERMINED BY AIR FLOW DIRECTION AND POWER SUPPLY INPUT VOLTAGE.

6. FOR TEST SPECIFICATION SEE TS 701210.
5. FOR TEST PROCEDURE SEE TP 701210.
4. FOR PRODUCT SPECIFICATION SEE PS 701210.
3. FOR INSTALLATION SEE OM 701210.

2 MARK CHARACTERS USING TYPEWRITER WITH RIBBON, UPPER CASE TYPE ONLY PER VIEW A.

1. ASSEMBLE AND INSPECT PER WORKMANSHIP STANDARDS MANUAL.

NOTES: UNLESS OTHERWISE SPECIFIED.

PRODUCTION RELEASE

-103	-102	-101	-100	NOTE	PART OR IDENTIFYING NO.	NOMENCLATURE OR DESCRIPTION / MATERIAL	SPEC/SOURCE	CODE IDENT NO.	FIND NO.
									5
X						FOR PARTS LIST SEE PL701210-103			4
	X					FOR PARTS LIST SEE PL701210-102			3
		X				FOR PARTS LIST SEE PL701210-101			2
			X			FOR PARTS LIST SEE PL701210-100			1

PART/ASSY NO. & QTY PER ASSY — PARTS LIST

-103	-102	-101	-100	PART/ASSY REV LTR
			A	
			A	
			A	
			A	
-103	FINAL			PM-1150/2A
-102	FINAL			PM-1150/2A
-101	FINAL			PM-1150/2A
-100	FINAL			PM-1150/2A
PART NO.	NEXT ASSY		USED ON	

APPLICATION

DO NOT SCALE DRAWING
SCREW THREADS PER HANDBOOK H28
COUNTERBORE AND SPOTFACE FILLET RADII TO BE .010 MAXIMUM
REMOVE ALL BURRS AND BREAK SHARP EDGES EQUIVALENT TO .010
ROUGHNESS OF MACHINED SURFACES 125/ PER USAS B46.1
STANDARD HOLE TOLERANCE PER AND SEMI
TOLERANCES ON .XX = ±.03 .XXX = ±.010 ANGLES = ±0°30'
INTERPRET DIMENSIONS AND TOLERANCES PER USAS Y14.5
DIMENSIONS ARE IN INCHES AND APPLY AFTER HEAT TREAT AND FINISH
UNLESS OTHERWISE SPECIFIED

CONTRACT NO.

DRAWN	TOM COMEY	1-25-77
CHECK		
ENGR		
PROJ. ENGR		
PROD. DESIGN		
OTHER APPROVALS		

Plessey Memories Incorporated
Santa Ana, California

DWG TITLE
EXPANSION CHASSIS, PM-1150/2

SIZE	CODE IDENT NO.	DWG NO.
F	52648	701210

SCALE: NONE — SHEET 1 OF 1

PARTS LIST	Plessey Memories Incorporated, Santa Ana, California	PREPARED BY: TOM COMEY 1-21-77	PARTS LIST NO. PL 701210-100	REV LTR A
ASSY TITLE: EXPANSION CHASSIS, PM-1150/2		CHECKED BY: R. COY 1-29-77	CODE IDENT NO. 52648	SH 1 OF 2
		NEW ENGR: 2-14-77		
		NEW ENGR: D. FOX 2-18-77		
		MFG: 5-26-78		

LTR	DESCRIPTION	DATE	APPROVED	LTR	DESCRIPTION	DATE	APPROVED
—	REL TO PROD EPO 501076	1-29-77	R.C				
A	INCORP EO 2150	5-19-78					

PRODUCTION RELEASE

REV STATUS OF SHEETS	REV LTR	A	A								
	SHEET	1	2	3	4	5	6	7	8	9	10

INTERPRET SYMBOLS USED AS FOLLOWS:
B = PURCHASED ITEM; D = FABRICATED ITEM; E = SPECIFICATION OR SOURCE CONTROL ITEM; G = ALTERED ITEM; H = SELECTED ITEM; F = CUSTOMER FURNISHED ITEM; G = BULK ITEM

PARTS LIST	Plessey Microsystems	CODE IDENT NO. 52648	PARTS LIST NO. PL 701210-100	SH 2	REV LTR A

REVISION	NOTE	QTY REQD	PART OR IDENTIFYING NO.	NOMENCLATURE OR DESCRIPTION	SPECIFICATION	CODE IDENT NO.	ZONE	FIND NO.	SYM	C/I USAGE: C/I CODE	TMY OR MAND	PAR	UNIT COST
		1	701209-100	CHASSIS ASSY, PM-1150/2				1	B				
		1	700077-001	PLATE, IDENTIFICATION				2	B				
A	(8)	1	701551-100	HARDWARE PACK, MISC MTG HDWR				3					

SIZE	CODE IDENT NO.	DWG NO.	SHEET 1 of 1
B	52648	PL 701210-100	
SCALE		REV A	

The information hereon is the property of PLESSEY PERIPHERAL SYS. Transmittal receipt or possession of the information does not comply, license, or imply any rights to use, sell, or manufacture from this information and no reproduction or publication of it, in whole or in part, shall be made without written authorization from PLESSEY PERIPHERAL SYS.

Form 000087

The information hereon is the property of PLESSEY MEMORIES INCORPORATED. Transmittal, receipt or possession of the information does not convey, license, or imply any rights to use, sell, or manufacture from this information and no reproduction or publication of it, in whole or in part, shall be made without written authorization from PLESSEY MEMORIES INC.

REVISIONS					
ZONE	LTR	DESCRIPTION		DATE	APPROVED
	—	REL TO PROD PER ERO 501075		1-28-71	
	A	INCORP E.O 1978	GG	6-30-71	
	B	INCORP EO 1934	R.H.	3-23-72	
	C	INCORP EO 2043	R.H.	3-23-72	

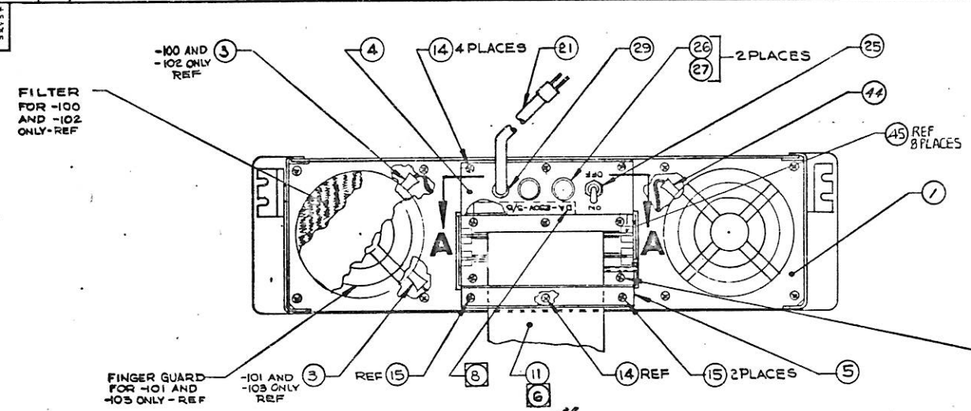

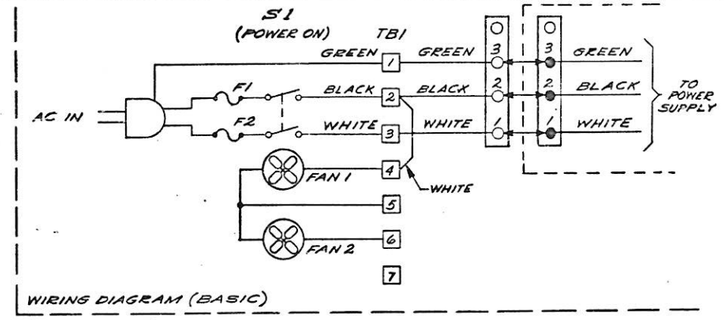

JUMPER CONFIGURATION	
115 VAC OPERATION	JUMPER TB1-3 TO TB1-5
	JUMPER TB1-4 TO TB1-6
230 VAC OPERATION	JUMPER TB1-3 TO TB1-6

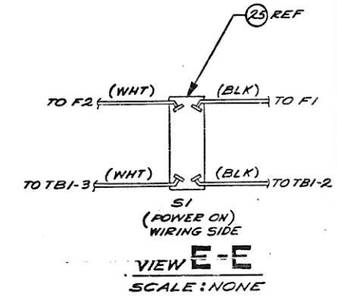

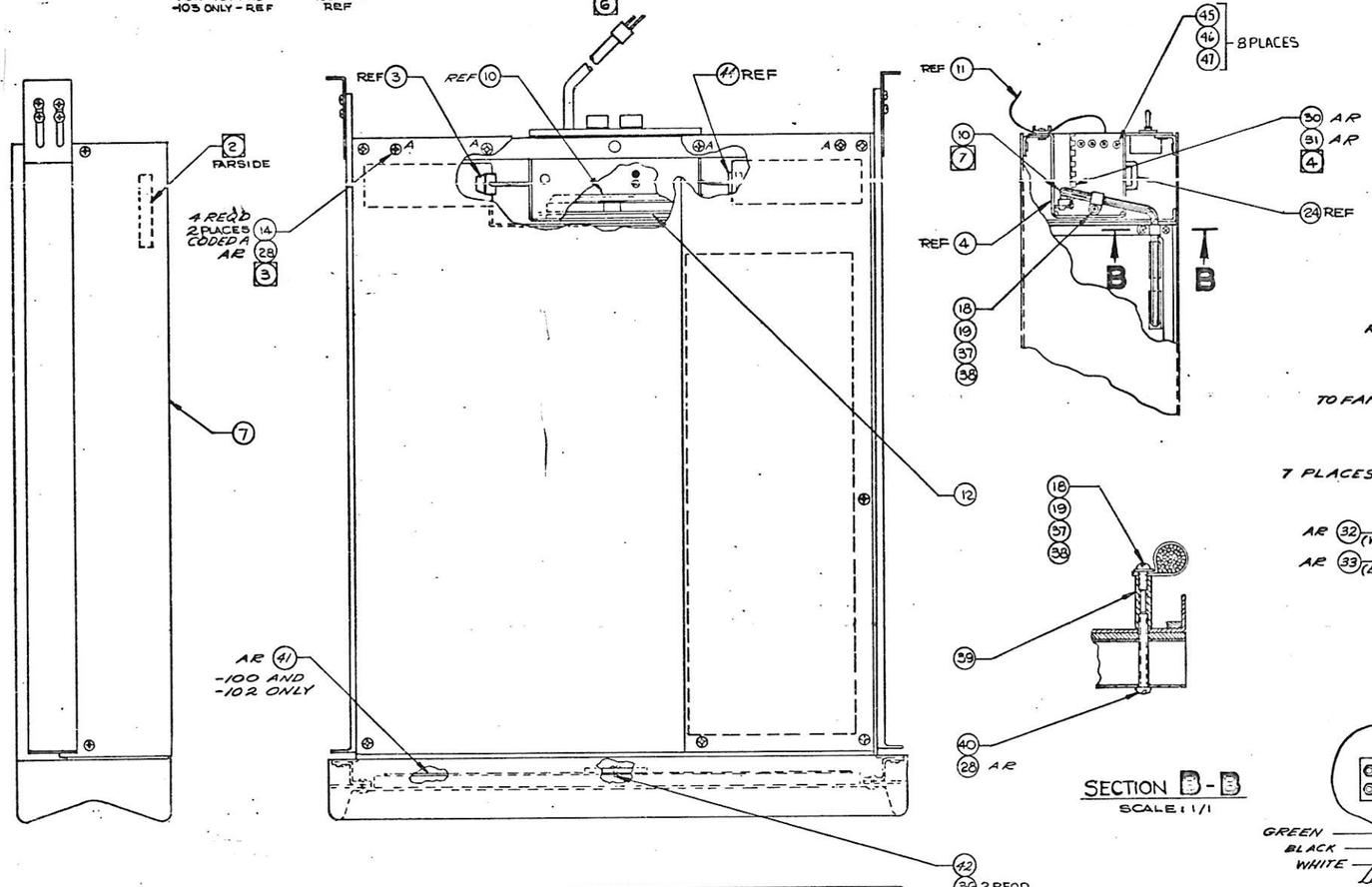

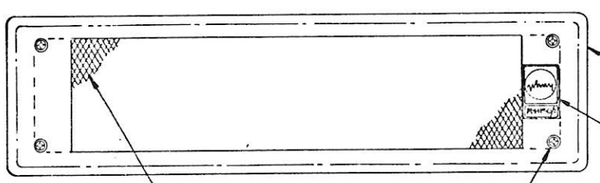

SECTION B-B
SCALE: 1/1

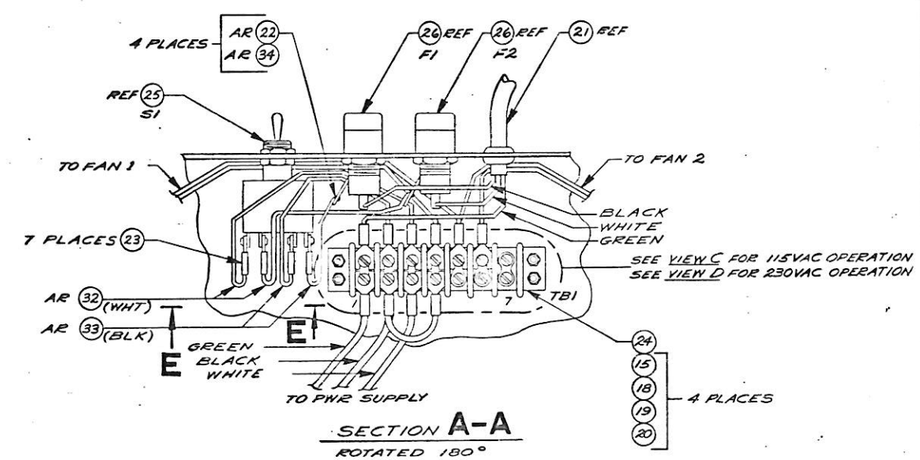

SECTION A-A
ROTATED 180°
SCALE: NONE

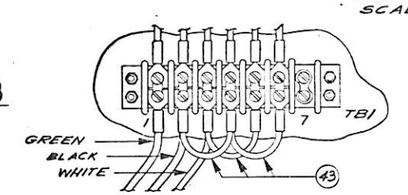

VIEW C FOR -100 AND -101 ONLY
SCALE: NONE

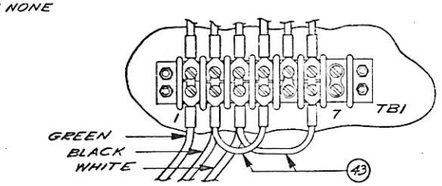

VIEW D FOR -102 AND -103 ONLY
SCALE: NONE

8. MARK FUSE TYPE USING BLACK INK. (A) VERSIONS -100 & -101: 10A-250V-S/B. (B) VERSIONS -102 & -103: 5A-250V-S/B.
7. INSTALL ITEM 10 ONTO CONNECTORS J1-A & J1-B OF ITEM 12 & ONTO CONNECTORS J3-A & J3-B OF BACKPLANE ASSEMBLY.
6. PART DASH NUMBER TO BE DETERMINED FROM CUSTOMER CABLE LENGTH REQUIREMENTS AS SPECIFIED ON SALES ORDER.
5. BOND ITEM 6 TO ITEM 2 USING ITEM 31 AS SHOWN.
4. BOND ITEM 30 TO ITEM 4 USING ITEM 31.
3. APPLY ITEM 26 TO ITEM 14.
2. MARK ASSEMBLY NUMBER, VERSION & LATEST ASSEMBLY REVISION LETTER WITH .12 HIGH CHARACTERS, USING BLACK INK PER MIL-M-13231, GROUP III, LOCATION APPROXIMATELY AS SHOWN.
1. ASSEMBLE & INSPECT PER WORKMANSHIP STANDARDS MANUAL.

NOTES: UNLESS OTHERWISE SPECIFIED

-103	-102	-101	-100	NOTE	PART OR IDENTIFYING NO.	NOMENCLATURE OR DESCRIPTION / MATERIAL	SPEC/SOURCE	CODE IDENT NO.	FIND NO.
			X			FOR PARTS LIST SEE PL701209-103			4
		X				FOR PARTS LIST SEE PL701209-102			3
	X					FOR PARTS LIST SEE PL701209-101			2
X						FOR PARTS LIST SEE PL701209-100			1

PART/ASSY NO. & QTY PER ASSY — PARTS LIST

PART/ASSY REV LTR				
		C	C	C	C
-103	701210-103	FM-1150/12		
-102	701210-102	FM-1150/12		
-101	701210-101	FM-1150/12		
-100	701210-100	FM-1150/12		
PART NO.	NEXT ASSY	USED ON		
	APPLICATION			

DO NOT SCALE DRAWING
SCREW THREADS PER HANDBOOK H-28
COUNTERBORE AND SPOTFACE FILLET RADII TO BE .010 MAXIMUM
REMOVE ALL BURRS AND BREAK SHARP EDGES EQUIVALENT TO .010
ROUGHNESS OF MACHINED SURFACES 125 PER USAS B46.1
STANDARD HOLE TOLERANCE PER ANSI
TOLERANCES ON: .XX = ±.01 .XXX = ±.005 ANGLES = ±0°30'
INTERPRET DIMENSIONS AND TOLERANCES PER USAS Y14.5
DIMENSIONS ARE IN INCHES AND APPLY AFTER HEAT TREAT AND FINISH UNLESS OTHERWISE SPECIFIED

CONTRACT NO.

DRAWN	TOM COMEY	1-22-71
CHECK		1-28-71
ENGR		
PROJ. ENGR		1-31-71
PROD. DESIGN		2-11-71
OTHER APPROVALS		

Plessey Memories Incorporated
Santa Ana, California

DWG TITLE: CHASSIS ASSEMBLY, PM-1150/12

SIZE: F | CODE IDENT NO.: 52648 | DWG NO.: 701209

SCALE: 1/2 | SHEET 1 OF 1

PRODUCTION RELEASE

PARTS LIST — Plessey Memories Incorporated, Santa Ana, California

DWG TITLE: CHASSIS ASSEMBLY, PM-1150/2

PREPARED BY: TOM COMLEY 1-14-77
PARTS BY: 1-28-77
NEW ENGR: 2-14-77
NEW ENGR: 1-31-77

PARTS LIST NO.: PL 701209-100 — REV LTR: B
CODE IDENT NO.: 52648 — S NO.: 1234570 — SH 1 OF 5

LTR	DESCRIPTION	DATE	APPROVED
—	REL TO PROD ERO 501075	1-28-77	
A	INCORP E.O. 1478 GB	6-29-77	
B	INCORP EO 2043 R.H.	3-23-78	

PRODUCTION RELEASE

REV STATUS OF SHEETS										
REV LTR	B	A	—	—	B					
SHEET	1	2	3	4	5	6	7	8	9	10

INTERPRET SYMBOLS USED AS FOLLOWS:
A = PURCHASED ITEM; B = FABRICATED ITEM; C = SPECIFICATION OR SOURCE CONTROL ITEM; D = ALTERED ITEM; E = SELECTED ITEM; F = CUSTOMER FURNISHED ITEM; G = MISC ITEM

PARTS LIST — Plessey Memories Incorporated, Santa Ana, California — CODE IDENT NO. 52648 — PARTS LIST NO. PL 701209-100 — SH 2 — REV LTR A

	NOTE	QTY REQD	PART OR IDENTIFYING NO.	NOMENCLATURE OR DESCRIPTION	SPECIFICATION	CODE IDENT NO.	ZONE	FIND NO.	SYM	C/I USAGE: C/I CODE	INV ON HAND	PAR	UNIT COST
		1	700343-100	PANEL ASSEMBLY/REAR				1	B				
		1	700121-100	PANEL ASSEMBLY/FRONT				2	B				
		1	701211-100	CABLE ASSY/POWER BLOWER				3	B				
		1	700342-100	BRACKET/I/O				4	B				
		1	700345-001	CLAMP/I/O CABLE				5	B				
		1	700205-001	NAMEPLATE/FRONT PANEL				6	B				
		1	701208-100	CHASSIS ASSEMBLY/115VAC				7	B				
A								8					
A								9					
		1	700364-100	CABLE ASSY/I/O INTERNAL				10	B				
	(6)	1	700144-	CABLE ASSY/I/O EXTERNAL				11	B				
		1	700363-100	I/O BOARD ASSY/INTERNAL				12	B				
		4	MS51959-30B	SCREW/FLAT HEAD, 82° X 1/2 LONG, BLACK OXIDE, 6-32				13	G				

PARTS LIST — Plessey Memories Incorporated, Santa Ana, California — CODE IDENT NO. 52648 — PARTS LIST NO. PL 701209-100 — SH 3 — REV LTR —

	NOTE	QTY REQD	PART OR IDENTIFYING NO.	NOMENCLATURE OR DESCRIPTION	SPECIFICATION	CODE IDENT NO.	ZONE	FIND NO.	SYM	C/I USAGE: C/I CODE	INV ON HAND	PAR	UNIT COST
		17	MS24693-24	SCREW/FLAT HEAD, 100° X 1/4 LONG, 6-32				14	G				
		6	MS51957-30	SCREW/PAN HEAD, 1/2 LONG, 6-32				15	G				
								16					
		4	FW-6	WASHER/FINISHING, NYLON, COLOR: BLACK, #6	WECKESSER	95987		17	A				
		6	MS35333-71	WASHER/INTERNAL TOOTH LOCK #6				18	G				
		6	MS15795-805	WASHER/FLAT #6				19	G				
		4	MS35649-262	NUT/HEX #6				20	G				
		1	777 SVT	AC CORD SET WITH 3 PRONG PLUG, RATED AT 300V-7A, .257 NOMINAL DIA. X 6 FEET LONG	ALPHA WIRE	92194		21	A				
		AR	FIT-105-3/16	TUBING/HEAT SHRINKABLE, PVC-BLACK	ALPHA WIRE	92194		22	G				
		7	322249	TERMINAL/FLANGED SPADE TONGUE	AMERICAN PANCOR INC.	04618		23	A				
		1	353-11-07-001	TERMINAL BLOCK/7 LUG	CINCH MFG	71785		24	A				
		1	8822K20	SWITCH/2 POSITION, 2 POLE	CUTLER-HAMMER	27193		25	A				
		2	342038A	FUSE HOLDER	LITTELFUSE	75915		26	A				

PARTS LIST — Plessey Memories Incorporated, Santa Ana, California — CODE IDENT NO. 52648 — PARTS LIST NO. PL 701209-100 — SH 4 — REV LTR —

	NOTE	QTY REQD	PART OR IDENTIFYING NO.	NOMENCLATURE OR DESCRIPTION	SPECIFICATION	CODE IDENT NO.	ZONE	FIND NO.	SYM	C/I USAGE: C/I CODE	INV ON HAND	PAR	UNIT COST
		2	MDA-10	FUSE/10AMP/250V SLO-BLO	BUSSMAN OR EQUIV	71400		27	A				
		AR	GRADE E	COMPOUND/LOCKING	LOCTITE	05972		28	G				
		1	R-5	BUSHING/STRAIN RELIEF	RICHLOK CORP			29	A				
		AR	CSG-09	GROMMET/FLEXIBLE NYLON	WECKESSER	95987		30	G				
		AR	E-POX-E 5	ADHESIVE/2 PART ADHESIVE AND HARDENER	WOODHILL CHEMICAL	08028		31	G				
		AR	TYPE E-16	WIRE, ELECTRICAL, INSUL-19 STRAND, COLOR: WHITE	MIL-W-16878/6			32	G				
		AR	TYPE E-16	WIRE, ELECTRICAL, INSUL-19 STRAND, COLOR: BLACK	MIL-W-16878/6			33	G				
		AR	Sn63WRAP3	SOLDER	QQ-S-571			34	G				
								35					
		2	TYPE A	SCREW/SELF THREADING, 4-24 X 1/2 CRES, PAN HD PHILLIPS REC				36	A				
		2	NX5	CLAMP/CABLE - 7/16	TYTON CORP			37	A				
		2	MS51957-27	SCREW/PAN HEAD, 6-32 X 5/16 LONG				38	G				
		1	8785	SPACER/1/4 OD X 7/8 LONG, 6-32	H.H. SMITH	83330		39	A				

SIZE: B — CODE IDENT NO.: 52648 — DWG NO.: PL 701209-100 — REV: B — SHEET 1 of 2 — SCALE:

The information hereon is the property of PLESSEY PERIPHERAL SYS. Transmittal receipt or possession of the information does not comply, license, or imply any rights to use, sell, or manufacture from this information and no reproduction or publication of it, in whole or in part, shall be made without written authorization from PLESSEY PERIPHERAL SYS.

Form 000087

PARTS LIST	Plessey Memories Incorporated, Santa Ana, California	CODE IDENT NO. 52648	PARTS LIST NO. PL701209-100	SH 5	REV LTR B

EFFECTIVITY CODE	NOTE	QTY REQD	PART OR IDENTIFYING NO.	NOMENCLATURE OR DESCRIPTION	SPECIFICATION	CODE IDENT NO.	ZONE	FIND NO.	SYM	C/I USAGE: C/I CODE	INV ON HAND	PAR	UNIT COST
		1	MS51957-35	SCREW/PAN HEAD, 6-32×1-1/4 LONG				40	G				
		AR	6360	TAPE/1/4 WIDE, PRESSURE SENSITIVE, DOUBLE BACKED	MYSTIK-DIV BORDEN	88301		41	G				
		1	700441-001	BAFFLE, FILTER				42	B				
		3	701206-100	CABLE ASSY, JUMPER				43	B				
		1	701211-101	CABLE ASSY/POWER BLOWER				44	B				
B		8	8079-N-0256	STANDOFF/3/16 DIA. 3/8 LG 2-56 THD, NYLON	AMATOM	06540		45	A				
B		8	MS51957-5	SCREW/2-56 X 3/8 LG, PAN HEAD				46	A				
A		8	MS35333-35	WASHER/#2, LOCK, INT TOOTH				47	A				
								48					
								49					
								50					
								51					
								52					

SIZE B | CODE IDENT NO. 52648 | DWG NO. PL 701209-100

SCALE | REV B | SHEET 2 of 2

The information hereon is the property of PLESSEY PERIPHERAL SYS. Transmittal receipt or possession of the information does not comply, license, or imply any rights to use, sell, or manufacture from this information and no reproduction or publication of it, in whole or in part, shall be made without written authorization from PLESSEY PERIPHERAL SYS.

Form 000087

The information hereon is the property of PLESSEY MEMORIES INCORPORATED. Transmittal, receipt or possession of the information does not convey, license, or imply any rights to use, sell, or manufacture from this information and no reproduction or publication of it, in whole or in part, shall be made without written authorization from PLESSEY MEMORIES INC.

REVISIONS				
ZONE	LTR	DESCRIPTION	DATE	APPROVED
	–	REL TO PROD PER ERO 501073	1-26-77	R.C.

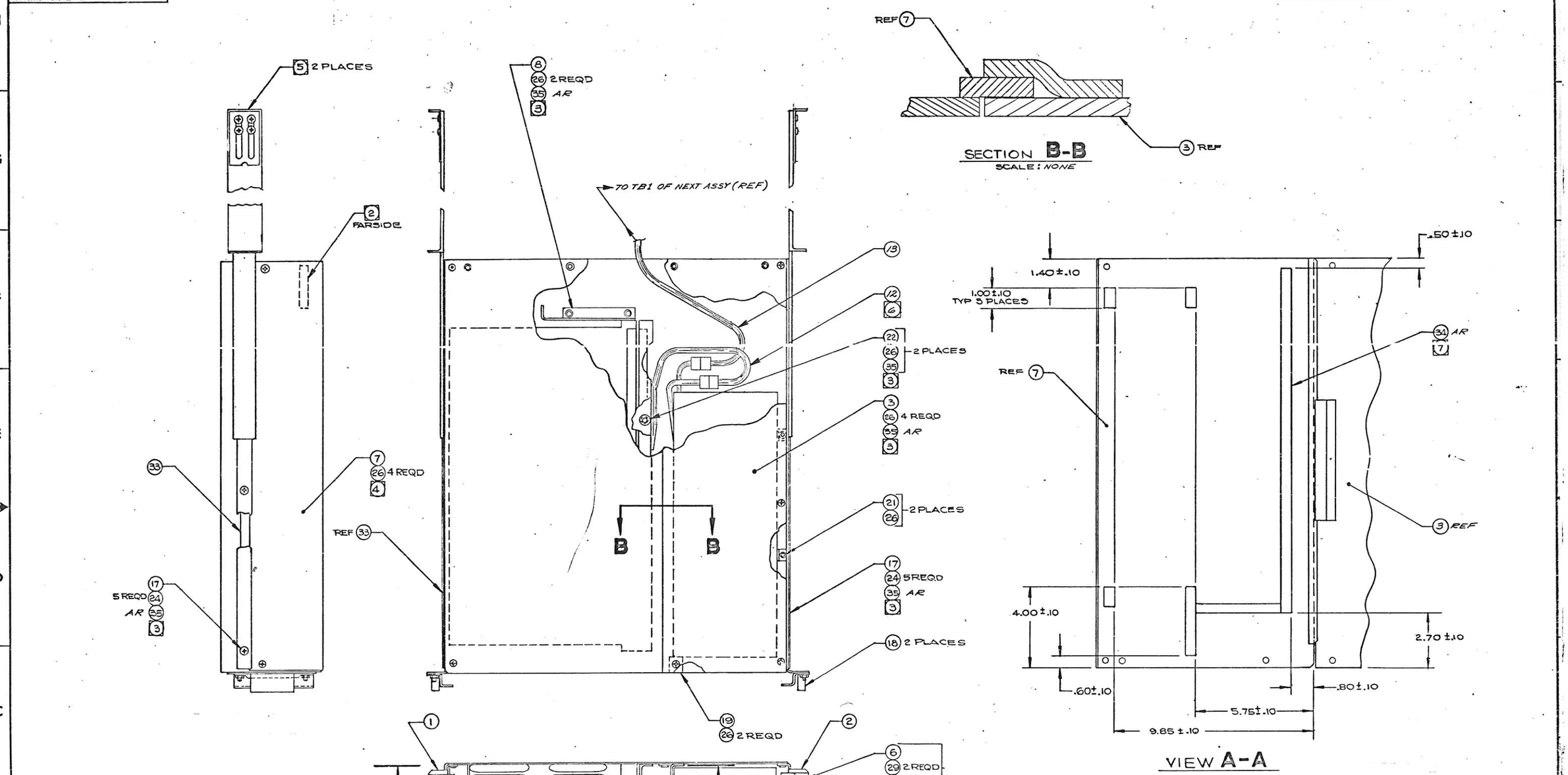

7. APPLY ITEM 34 TO ITEM 7, 6 PLACES AS SHOWN, PRIOR TO ASSEMBLY.
6. INSTALL ITEM 12 ONTO ITEM 11 AND ITEM 15 AS SHOWN.
5. MOUNT REAR BRACKET TO ITEM 17 ON SLIDE USING 10-32 HARDWARE PROVIDED.
4. DO NOT TORQUE OR APPLY ITEM 35 TO FOUR SCREWS WHICH MOUNT ITEM 7.
3. APPLY ITEM 35 TO SCREW AND TORQUE TO 8.50 ±.25 INCH/POUNDS.
2. MARK ASSEMBLY NUMBER, VERSION AND LATEST ASSEMBLY REVISION LETTER WITH .12 HIGH CHARACTERS USING BLACK INK PER MIL-M-13231, GROUP III. LOCATE APPROXIMATELY AS SHOWN.
1. ASSEMBLE AND INSPECT PER WORKMANSHIP STANDARDS MANUAL.

NOTES: UNLESS OTHERWISE SPECIFIED.

PRODUCTION RELEASE

PART/ASSY NO. & QTY PER ASSY							NOMENCLATURE OR DESCRIPTION / MATERIAL	SPEC/SOURCE	CODE IDENT NO.	FIND NO.
										5
										4
										3
						X	FOR PARTS LIST SEE PL701208-101			2
						X	FOR PARTS LIST SEE PL701208-100			1
					-101	-100	NOTE: PART OR IDENTIFYING NO.			

PARTS LIST

PART/ASSY REV LTR				
-101	701209-103	PM-1150/2		
-101	701209-102	PM-1150/2		
-100	701209-101	PM-1150/2		
-100	701209-100	PM-1150/2		
PART NO.	NEXT ASSY	USED ON		

APPLICATION

DO NOT SCALE DRAWING
REMOVE ALL BURRS AND BREAK SHARP EDGES EQUIVALENT TO .010
ROUGHNESS OF MACHINED SURFACES 125/ PER USAS B46.1
STANDARD HOLE TOLERANCE PER AND SEMT
TOLERANCES ON .XX = ±.03 .XXX = ±.010 ANGLES = ±0°30'
UNLESS OTHERWISE SPECIFIED

CONTRACT NO.

DRAWN	TOM COMEY	1-20-77
CHECK		
ENGR		
PROJ. ENGR		
PROD. DESIGN		
OTHER APPROVALS		

Plessey Memories Incorporated
Santa Ana, California

DWG TITLE: CHASSIS ASSEMBLY, PM-1150/2

SIZE	CODE IDENT NO.	DWG NO.
F	52648	701208

SCALE: 1/2 AND ENLARGED | SHEET 1 OF 1

DISTR. NO.

PARTS LIST — Plessey Memories Incorporated, Santa Ana, California

PREPARED BY: TOM COMEY 1-6-77 | CHECKED BY: R. COX 1-26-77 | REV DRAW: 2-14-77 | REV CHGS: D.F.I 1-26-77

PARTS LIST NO. PL701208-100 | REV LTR —

CODE IDENT NO. 52648 | SH 1 OF 4

DEV TITLE: CHASSIS ASSEMBLY, PM-1150/2

LTR	DESCRIPTION	DATE	APPROVED
—	REL TO PROD PER ER0501073	1-26-77	R.C.

PRODUCTION RELEASE

REV STATUS OF SHEETS											
REV LTR	—	—	—	—							
SHEET	1	2	3	4	5	6	7	8	9	10	

INTERPRET SYMBOLS USED AS FOLLOWS:
A = PURCHASED ITEM; B = FABRICATED ITEM; C = SPECIFICATION OR SOURCE CONTROL ITEM; D = MENU ITEM; E = SELECTED ITEM; F = CUSTOMER FURNISHED ITEM; G = BULK ITEM

PARTS LIST — Plessey Memories Incorporated, Santa Ana, California — CODE IDENT NO. 52648 — PARTS LIST NO. PL701208-100 — SH 2

QTY REQD	PART OR IDENTIFYING NO.	NOMENCLATURE OR DESCRIPTION	SPECIFICATION	CODE IDENT NO.	ZONE	FIND NO.	SYM	C/I CODE	INV ON HAND	PAR	UNIT COST
1	700263-100	PANEL/SIDE, LH				1	B				
1	700264-100	PANEL/SIDE, RH				2	B				
1	700267-100	PANEL/TOP				3	B				
						4					
						5					
2	700268-100	BRACKET/FRONT PANEL				6	B				
1	700293-100	PANEL/TOP COVER				7	B				
1	700269-100	BRACKET/REAR				8	B				
1	700279-100	PANEL/BOTTOM				9	B				
						10					
1	700275-100	CAGE ASSEMBLY/CARD				11	B				
1	700507-100	CABLE ASSY/POWER, DC				12	B				
1	701207-100	CABLE ASSEMBLY, POWER SUPPLY, AC				13	B				

PARTS LIST — Plessey Memories Incorporated, Santa Ana, California — CODE IDENT NO. 52648 — PARTS LIST NO. PL701208-100 — SH 3

QTY REQD	PART OR IDENTIFYING NO.	NOMENCLATURE OR DESCRIPTION	SPECIFICATION	CODE IDENT NO.	ZONE	FIND NO.	SYM	C/I CODE	INV ON HAND	PAR	UNIT COST
						14					
1	700926-100	POWER SUPPLY/115 V AC				15	B				
						16					
1 PAIR	700337-001	SLIDE, CHASSIS/WITH MOUNTING BRACKET SET				17	B				
2	02-10-201-10	LATCH/MAGNETIC	SOUTHCO	94222		18	A				
1	700294-100	BRACKET/SUPPORT				19	B				
						20					
2	700309-100	BRACKET/SUPPORT				21	B				
2	8156-SS-0632	STANDOFF/1/4 DIA X 1/2 LONG	AMATOM	06540		22	A				
2	MS51957-60	SCREW/PAN HEAD, 10-32 X 5/16 LG.				23	G				
10	MS51957-26	SCREW/PAN HEAD, 6-32×1/4 LG				24	G				
						25					
27	MS24693-24	SCREW/FLAT HEAD, 100° 6-32 X 1/4 LONG				26	G				

PARTS LIST — Plessey Memories Incorporated, Santa Ana, California — CODE IDENT NO. 52648 — PARTS LIST NO. PL701208-100 — SH 4

QTY REQD	PART OR IDENTIFYING NO.	NOMENCLATURE OR DESCRIPTION	SPECIFICATION	CODE IDENT NO.	ZONE	FIND NO.	SYM	C/I CODE	INV ON HAND	PAR	UNIT COST
						27					
						28					
4	MS35333-37	WASHER/INTERNAL TOOTH LOCK #6				29	G				
						30					
4	MS35649-264	NUT/HEX #6				31	G				
						32					
1	700274-001	PLATE/SLIDE				33	B				
AR	534	TAPE/VINYL FOAM, PRESSURE SENSITIVE, ADHESIVE BACKED, 1/8 THK X 1/2 WIDE. COLOR: BLACK	NORTON CO.	06565		34	G				
AR	GRADE E	COMPOUND/LOCKING	LOCTITE	05972		35	G				

SIZE B — CODE IDENT NO. 52648 — DWG NO. PL 701208-100 — REV — — SCALE — SHEET 1 of 1

The information hereon is the property of PLESSEY PERIPHERAL SYS. Transmittal receipt or possession of the information does not comply, license, or imply any rights to use, sell, or manufacture from this information and no reproduction or publication of it, in whole or in part, shall be made without written authorization from PLESSEY PERIPHERAL SYS.

Form 000087

The information herein is the property of PLESSEY MEMORIES INCORPORATED. Transmittal, receipt or possession of the information does not convey license or any other rights to use, sell, or manufacture from this information and no reproduction or publication of it in whole or in part, shall be made without written authorization from PLESSEY MEMORIES, INC.

REVISIONS				
ZONE	LTR	DESCRIPTION	DATE	APPROVED
/	A	REL TO PROD PER EO 5231	8-7-78	

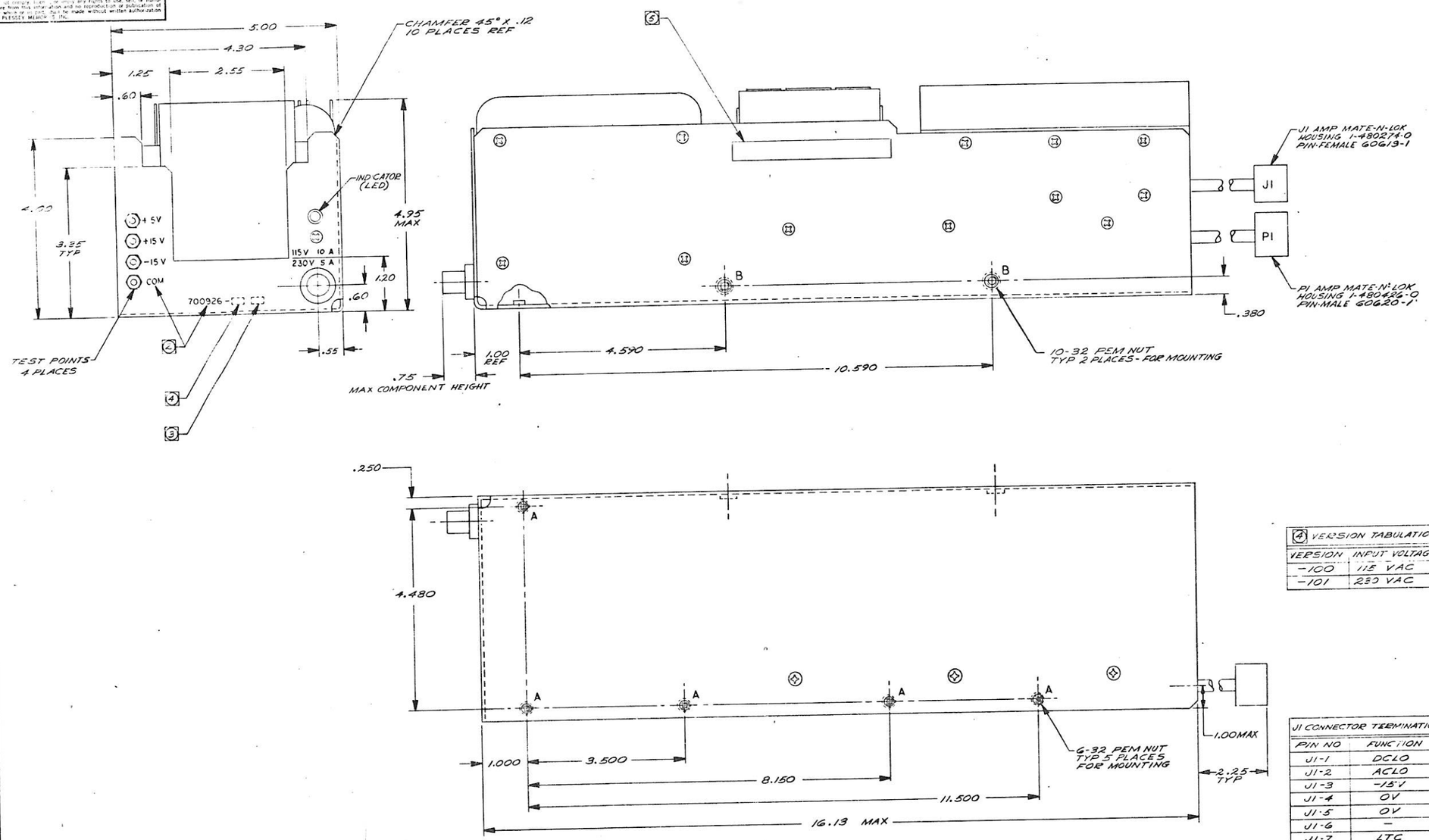

VERSION TABULATION	
VERSION	INPUT VOLTAGE
-100	115 VAC
-101	230 VAC

MOUNTING HOLE TABULATION		
SYMBOL	PRESS FIT THREAD SIZE	QTY
A	6-32	5
B	10-32	2

J1 CONNECTOR TERMINATION	
PIN NO	FUNCTION
J1-1	DCLO
J1-2	ACLO
J1-3	-15V
J1-4	0V
J1-5	0V
J1-6	—
J1-7	LTC
J1-8	+15V
J1-9	+5V

P1 CONNECTOR TERMINATION	
PIN NO.	FUNCTION
P1-1	AC
P1-2	AC
P1-3	GND
P1-4	—

PRODUCTION RELEASE

PART/ASSY NO. & QTY PER ASSY						NOTE	PART OR IDENTIFYING NO.	NOMENCLATURE OR DESCRIPTION / MATERIAL	SPEC/SOURCE	CODE IDENT NO.	FIND NO.
											5
											4
											3
				X		(1)		POWER SUPPLY 230 VAC INPUT			2
					X	(1)		POWER SUPPLY 115 VAC INPUT			1
				-101	-100						

PARTS LIST

PART/ASSY REV LTR		
	A	A
PART NO.	NEXT ASSY	USED ON

APPLICATION

DO NOT SCALE DRAWING
SCREW THREADS PER HANDBOOK H-28
COUNTERBORE AND SPOTFACE FILLET RADII TO .05 .010 MAXIMUM
REMOVE ALL BURRS AND BREAK SHARP EDGES EQUIVALENT TO .010
ROUGHNESS OF MACHINED SURFACES 125 PER USAS B46.1
STANDARD HOLE TOLERANCE PER ANSI B32.7
TOLERANCES ON .XX = ± .03 .XXX = ± .010 ANGLES = ± 1° 30'
INTERPRET DIMENSIONS AND TOLERANCES PER USAS Y14.5
DIMENSIONS ARE IN INCHES AND APPLY AFTER HEAT TREAT AND FINISH
UNLESS OTHERWISE SPECIFIED

CONTRACT NO.

DRAWN	TOM COMEY	9-27-76
CHECK		8-7-78
ENGR		8-7-78
PROJ. ENGR		
PROD. DESIGN		8-7-78
OTHER APPROVALS		

Plessey Memories Incorporated
Santa Ana, California

DWG TITLE
POWER SUPPLY
MECHANICAL OUTLINE
PM-1150/2

SIZE	CODE IDENT NO.	DWG NO.
D	52648	700926

SCALE: NONE

SHEET 1 OF 1

DISTR NO. 12-690 D

(5) VENDOR NAMEPLATE LOCATION.

(4) SEE TABULATION CHART FOR INPUT VOLTAGE REQUIREMENT AND CORRESPONDING ASSEMBLY NUMBER VERSION.

(3) MARK LATEST PART REVISION LETTER WITH .12 HIGH CHARACTERS, USING BLACK INK PER MIL-M-13231, GROUP III, LOCATED APPROXIMATELY AS SHOWN.

(2) PLESSEY PART NUMBER, AMP RATING AND ALL TEST POINT DESIGNATIONS TO BE SILKSCREENED WITH .12 INCH HIGH CHARACTERS, USING BLACK INK. LOCATED APPROXIMATELY AS SHOWN.

(1) FOR ELECTRICAL PARAMETERS SEE SPECIFICATION NO. 100054

NOTES: UNLESS OTHERWISE SPECIFIED

700926 REV A

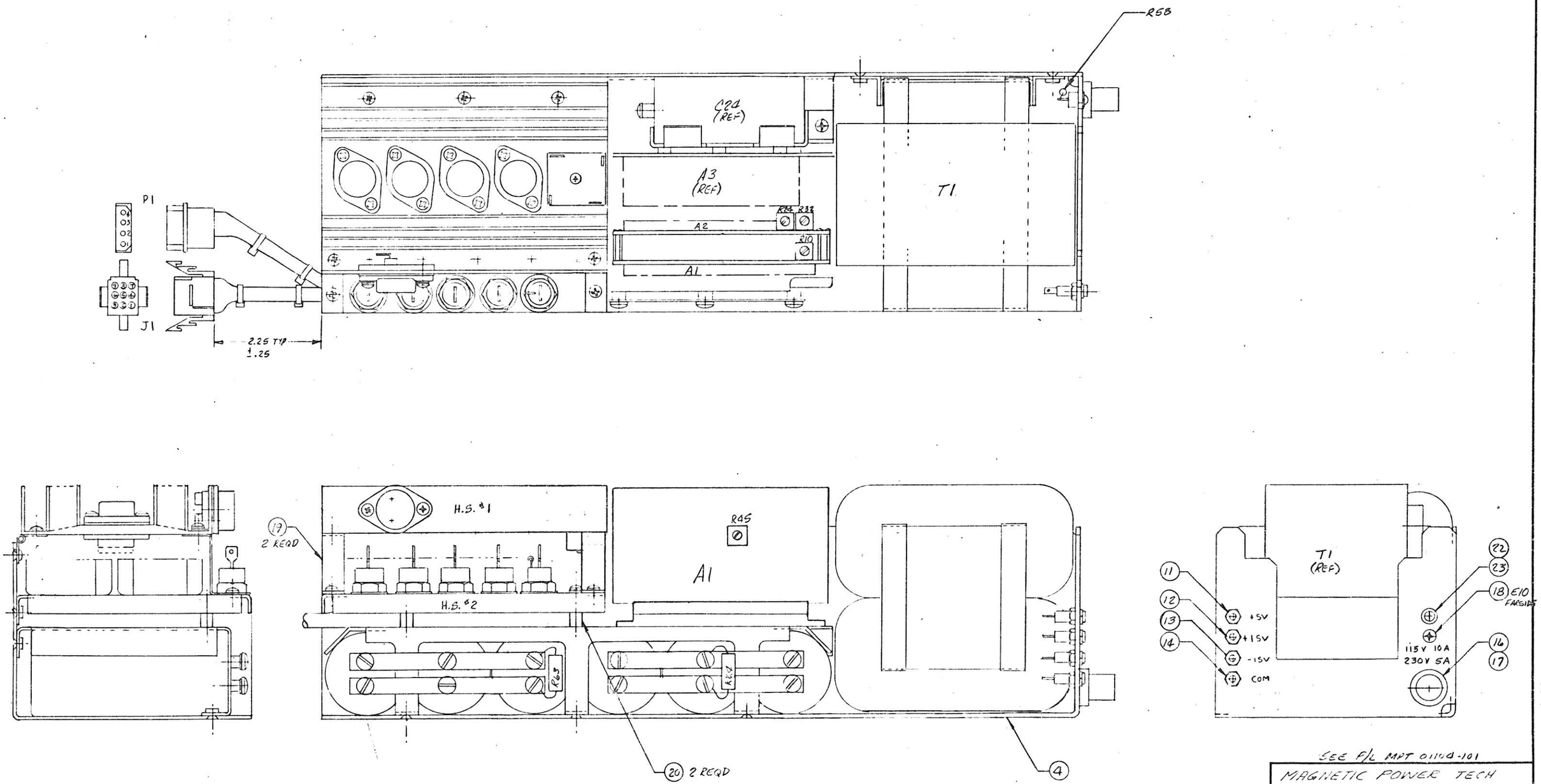

SEE F/L MPT 01104-101

MAGNETIC POWER TECH		
SCALE: FULL DATE: 9-11-76	APPROVED BY	DRAWN BY: [illegible] REVISED: 4-5-77
POWER SUPPLY ASSY (PLESSEY 125.)		
100084		DRAWING NUMBER MPT01104

21134 PRINTED ON NO. 1000R CLEARPRINT

MAGNETIC PULSE TECHNOLOGY PARTS LIST	MPT #	CUSTOMER #	REV.	DATE
	1100	SK700926-100	X1	4-21-77

CUSTOMER	CUSTOMER PO#	QTY	SCHEDULE	PREP. BY
PLESSEY				KNUESS

ITEM NO	REF DESIGN	PART OR I.D. NUMBER	NOMENCLATURE OR DESCRIPTION	QTY	UNIT	LINE	MIL SPEC-VENDOR	TOTAL QTY REQ	ON HAND	1	2	PO. NO.	QTY ORD.	DATE ORD.	VENDOR	DATE PROM.	PRICE
1		MPT-01104-101	ASSY - POWER SUPPLY	REF		1											
2		MPT-01103	W/L - " "	REF		2											
3		MPT-01102	SCHEM - " "	REF		3											
4	-	MPT-01107	CHASSIS			4											
5	A1	MPF01117-101	ASSY PCB, +5V REG. & LOGIC	1		5											
6	A2	MPT-01118-101	ASSY PCB, ±15V. REG.	1		6											
7	H.S. #1	MPT-01105-101	ASSY, HEAT SINK - UPPER	1		7											
8	H.S. #2	MPT-01106-101	ASSY, HEAT SINK - LOWER	1		8											
9		MPT-01122-101	ASSY, CAPACITOR CHASSIS	1		9											
10	T1	MPT-2256	TRANSFORMER, POWER	1		10	MAG PULSE										
11	TP +5V	1459-108	TEST POINT - (BROWN)	1		11											
12	TP +15	1459-102	TEST POINT - (RED)	1		12											
13	TP -15	1459-106	TEST POINT - (ORANGE)	1		13											
14	TP COM	1459-103	TEST POINT - (BLACK)	1		14											
15	V1 V2	V220MA2A	TRANSIENT SUPPRESSOR	2		15	G.E.										
16	(F1)	HTA	HOLDER, INDICATOR FUSE	1		16	BUSS										
17	F1	GLH 10	FUSE - 10 AMP	1		17	BUSS										

UNASSIGNED COLUMNS USAGE (1) (2) — MULTIPLIER — TOTAL THIS PAGE

PARTS LIST PAGE 1 MPT 01104-101 REV A

MAGNETIC PULSE TECHNOLOGY PARTS LIST	MPT #	CUSTOMER #	REV.	DATE
	1100			4-21-77

CUSTOMER	CUSTOMER PO#	QTY	SCHEDULE	PREP. BY
PLESSEY				KNUESS

ITEM NO	REF DESIGN	PART OR I.D. NUMBER	NOMENCLATURE OR DESCRIPTION	QTY	UNIT	LINE	MIL SPEC-VENDOR	TOTAL QTY REQ	ON HAND	1	2	PO. NO.	QTY ORD.	DATE ORD.	VENDOR	DATE PROM.	PRICE
18	E10	1461-T-4-11.2	STANDOFF, INSULATED (TURRET)	1		1	USECO										
19		MPT 01109	BRACKET, Z UPPER HEAT SINK	2		2											
20		8504	SPACER, #6 x 5/8 LG 1/4 O.D.	2		3	H.H. SMITH										
21						4											
22	IND 1	TIL220	LED - RED	1		5	T.I.										
23		TIL220M	MTG HRDW - LED.	1		6	T.I.										
24	R58	RC07221J	RES. 220Ω 1/4W ± 5%	1		7	RCA										
25	J1	1-480274-0	CONNECTOR, D.C. OUT	1		8	AMP IND.										
26		60619-1	PINS, CONNECTOR FEMALE CRIMP	7		9	"										
27	P1	1-480426-0	CONNECTOR, A.C. IN	1		10	"										
28		60620-1	PINS, CONNECTOR MALE CRIMP	3		11	"										
29						12											
30						13											
31						14											
32						15											
33						16											
34						17											

UNASSIGNED COLUMNS USAGE (1) (2) — MULTIPLIER — TOTAL THIS PAGE

PARTS LIST PAGE 2 MPT 01104-101 REV A

The information hereon is the property of PLESSEY PERIPHERAL SYS. Transmittal receipt or possession of the information does not comply, license, or imply any rights to use, sell, or manufacture from this information and no reproduction or publication of it, in whole or in part, shall be made without written authorization from PLESSEY PERIPHERAL SYS.

SIZE	CODE IDENT NO.	DWG NO.
B	52648	MPT01104-101
SCALE	REV A	SHEET 1 of 1

Form 000087

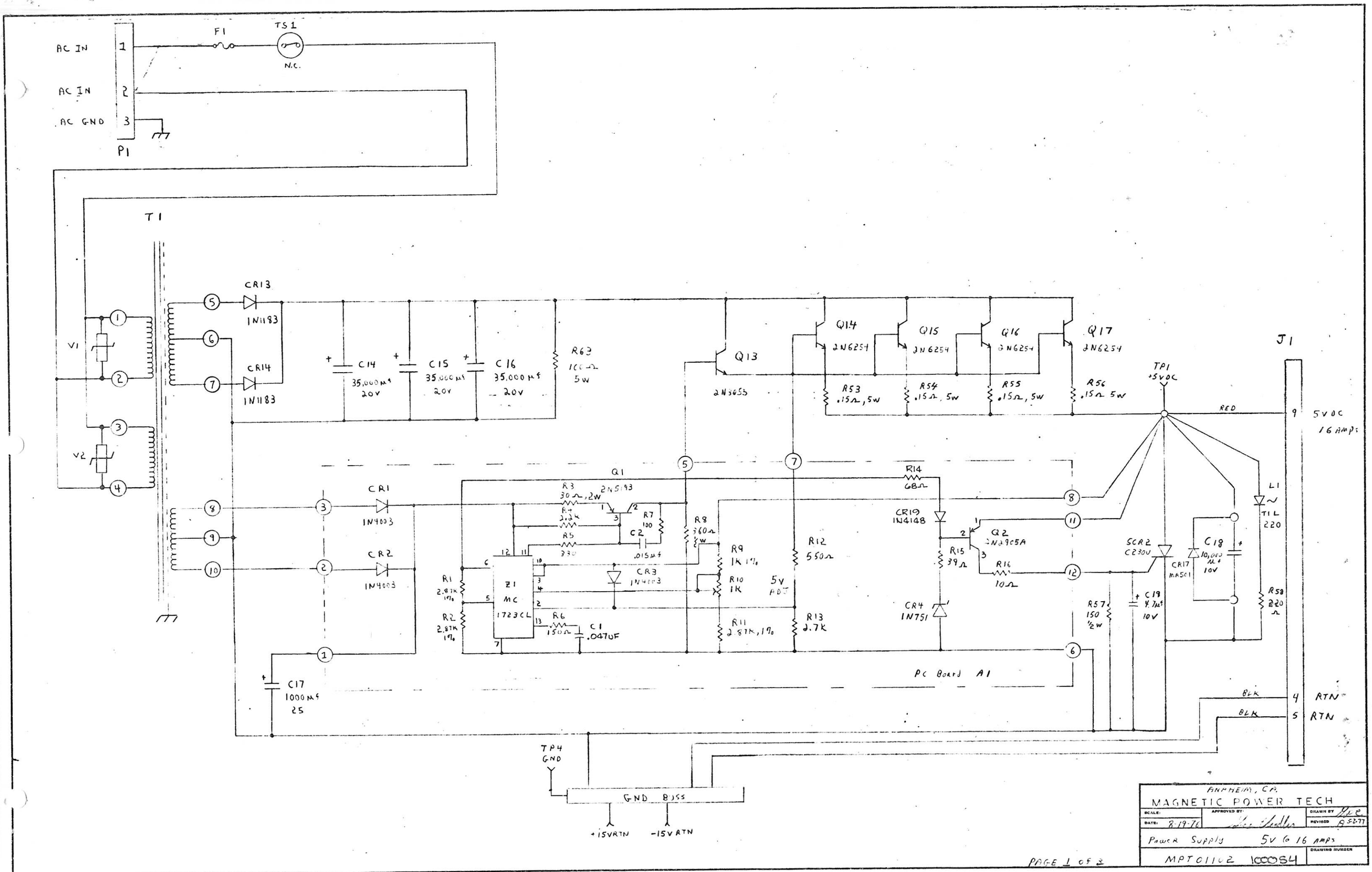
AC IN
AC IN
AC GND
P1
F1
TS1
N.C.
T1
V1
V2
CR13
1N1183
CR14
1N1183
C14
35,000 µf
20V
C15
35,000 µf
20V
C16
35,000 µf
20V
R63
100Ω
5W
Q13
2N6555
Q14
2N6254
Q15
2N6254
Q16
2N6254
Q17
2N6254
R53
.15Ω, 5W
R54
.15Ω, 5W
R55
.15Ω, 5W
R56
.15Ω 5W
TP1
+5VDC
RED
J1
9
5VDC
16 AMPS
CR1
1N4003
CR2
1N4003
Q1
2N5193
R3
30Ω, 2W
R4
2.2K
R5
330
R7
100
C2
.015µf
R8
560Ω
R9
1K 1%
R10
1K
5V
ADJ
CR3
1N4003
Z1
MC
1723CL
R1
2.87K 1%
R2
2.87K 1%
R6
150Ω
C1
.047UF
R11
2.87K, 1%
R12
560Ω
R13
2.7K
R14
68Ω
CR19
1N4148
Q2
2N2905A
R15
39Ω
R16
10Ω
CR4
1N751
SCR2
C230U
CR17
MA501
C18
10,000 µf
10V
C19
4.7µf
10V
R57
150
½W
L1
TIL
220
R58
220
Ω
C17
1000 µf
25
PC Board A1
BLK
BLK
4
RTN
5
RTN
TP4
GND
GND BUSS
+15VRTN
-15V RTN
ANAHEIM, CA.
MAGNETIC POWER TECH
SCALE:
DATE: 8-19-76
APPROVED BY:
DRAWN BY
REVISED 9-5-77
Power Supply 5V to 16 AMPS
DRAWING NUMBER
MPT01102 100054
PAGE 1 OF 2

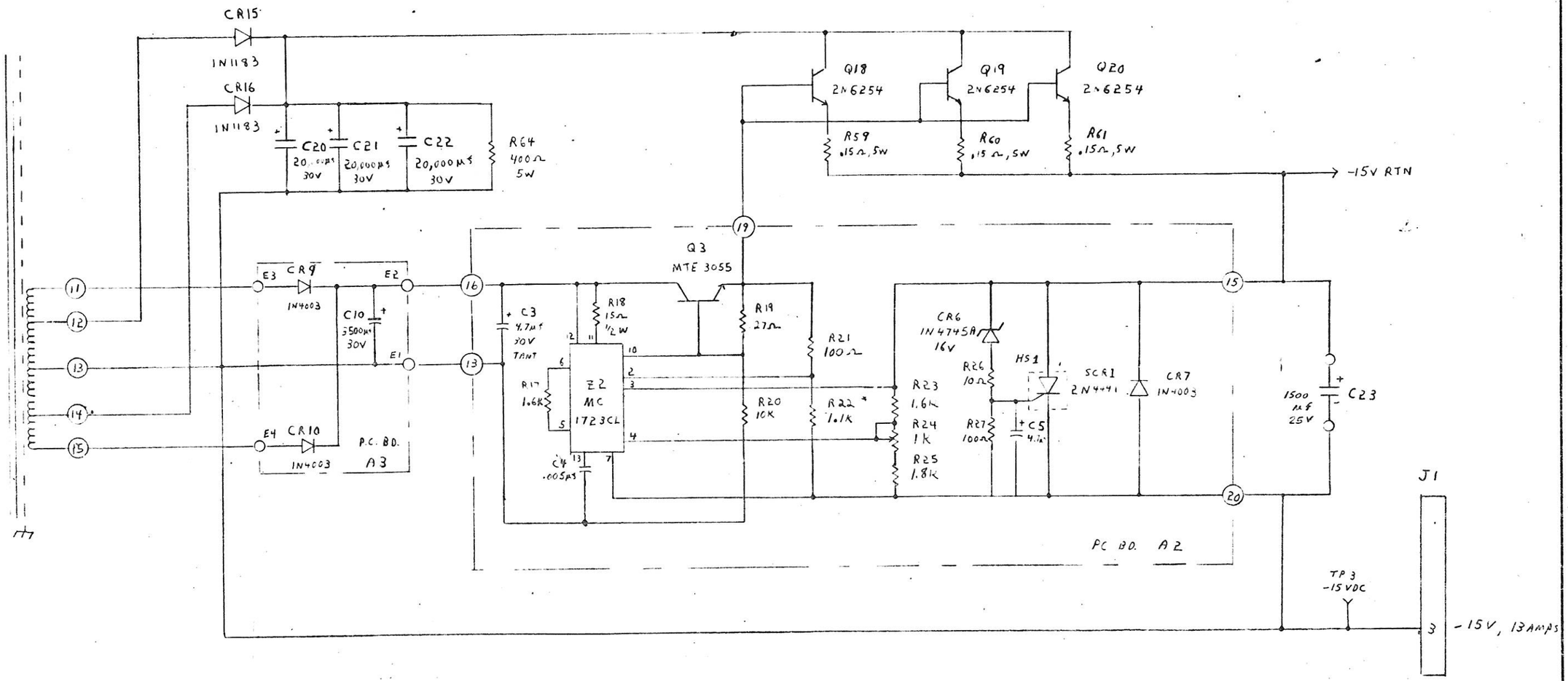

* TEST SELECT

MAGNETIC POWER TECH		
SCALE: DATE: 8/19/76	APPROVED BY:	DRAWN BY: REVISED
Power Supply -15V @ 13 AMP		
MPT 01102 100054		DRAWING NUMBER

PAGE 2 OF 3

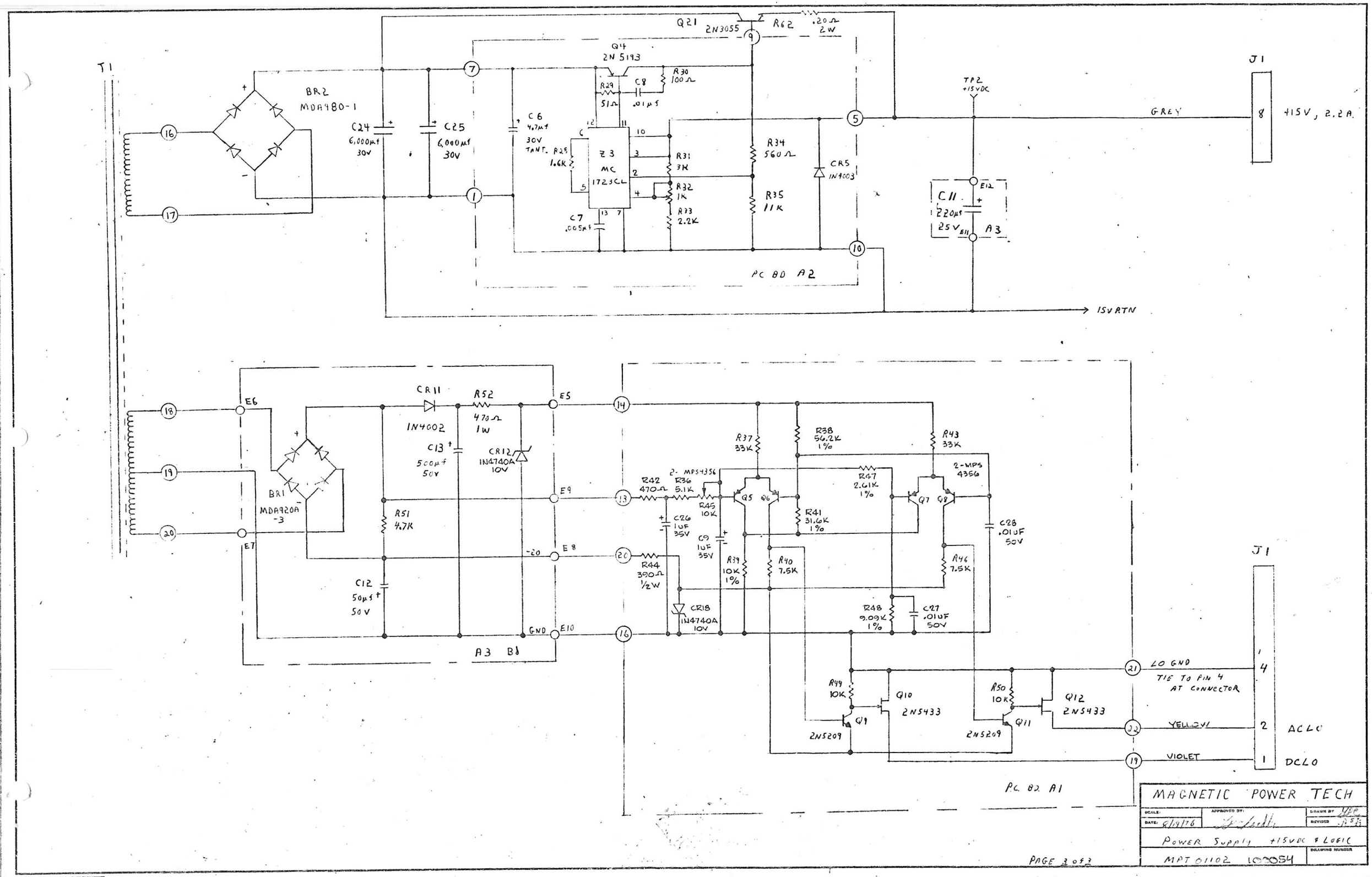
T1
BR2
MDA980-1
C24
6,000µf
30V
C25
6,000µf
30V
C6
4.7µf
30V
TANT.
R28
1.6K
Z3
MC
1723CL
C7
.005µf
R29
51Ω
C8
.01µf
R30
100Ω
Q4
2N5193
Q21
2N3055
R62
.20Ω
2W
R31
3K
R32
1K
R33
2.2K
R34
560Ω
R35
11K
CR5
1N4003
TP2
+15VDC
C11
220µf
25V
A3
GREY
J1
+15V, 2.2A.
15VRTN
PC BD A2
BR1
MDA920A
-3
CR11
1N4002
R52
470Ω
1W
C13
500µf
50V
CR12
1N4740A
10V
R51
4.7K
C12
50µf
50V
E6
E7
E5
E9
E8
E10
GND
-20
A3 B1
R42
470Ω
R36
5.1K
2-MPS4356
R45
10K
C26
1uF
35V
C9
1uF
35V
R44
390Ω
1/2W
CR18
1N4740A
10V
R37
33K
R38
56.2K
1%
R41
31.6K
1%
R39
10K
1%
R40
7.5K
Q5
Q6
R47
2.61K
1%
R43
33K
2-MPS
4356
Q7
Q8
C28
.01uF
50V
R46
7.5K
R48
9.09K
1%
C27
.01uF
50V
R49
10K
Q9
2N5209
Q10
2N5433
R50
10K
Q11
2N5209
Q12
2N5433
LO GND
TIE TO PIN 4
AT CONNECTOR
YELLOW
VIOLET
J1
AC LO
DC LO
PC BD A1
MAGNETIC POWER TECH
SCALE:
DATE: 8/19/76
APPROVED BY:
DRAWN BY
REVISED
POWER SUPPLY +15VDC & LOGIC
DRAWING NUMBER
MPT 01102 100054
PAGE 3 of 3